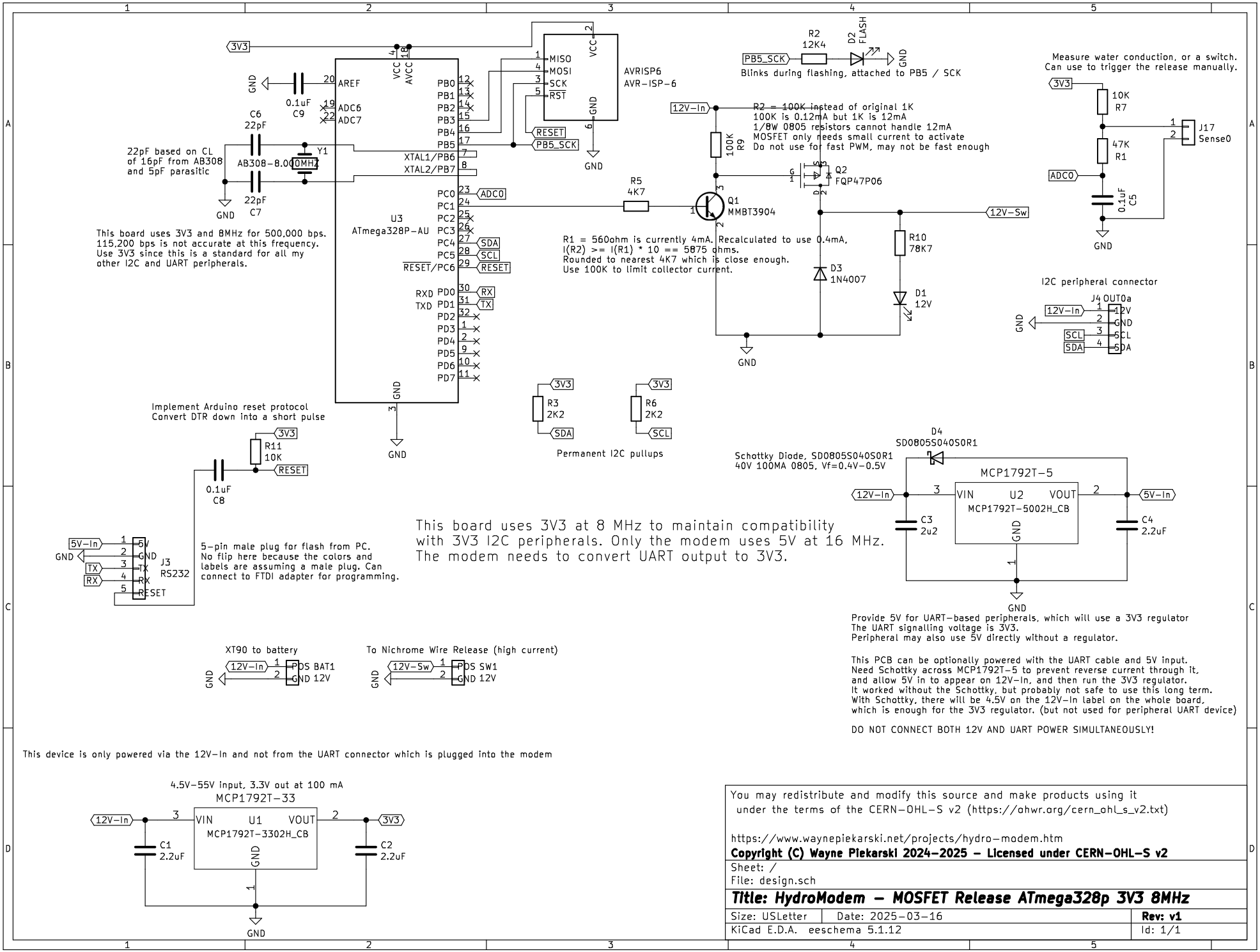


You may redistribute and modify this source and make products using it
under the terms of the CERN-OHL-S v2 (https://ohwr.org/cern_ohl_s_v2.txt)

https://www.waynepiekarski.net/projects/hydro-modem.htm

**Copyright (C) Wayne Piekarski 2024-2025 - Licensed under CERN-OHL-S v2**

Sheet: /
File: design.sch

**Title: HydroModem - MOSFET Release ATmega328p 3V3 8MHz**

| | | |
|---|---|---|
| Size: USLetter | Date: 2025-03-16 | **Rev: v1** |
| KiCad E.D.A. eeschema 5.1.12 | | Id: 1/1 |